Dynamic Designs

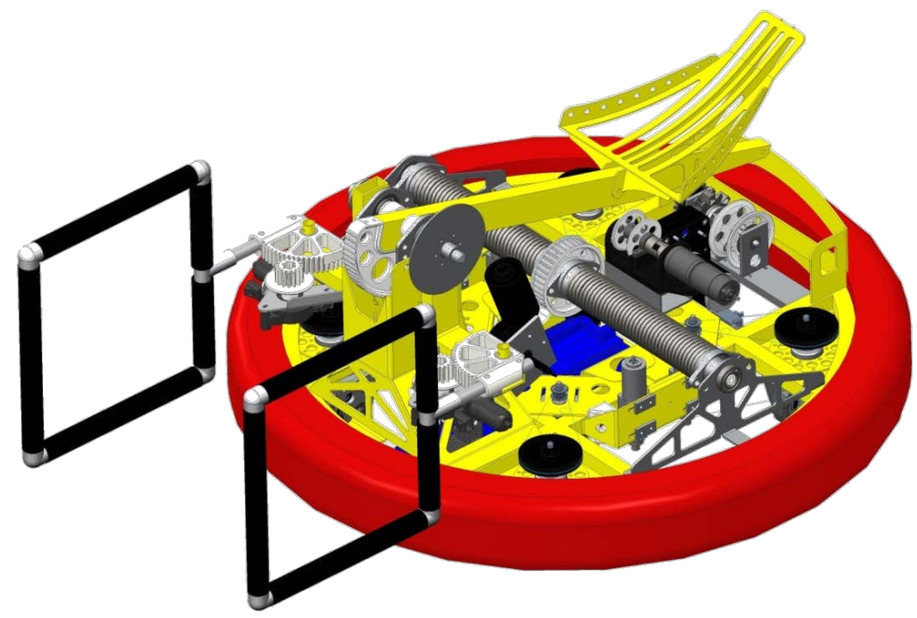

FRC®
FIRST® Robotics Competition

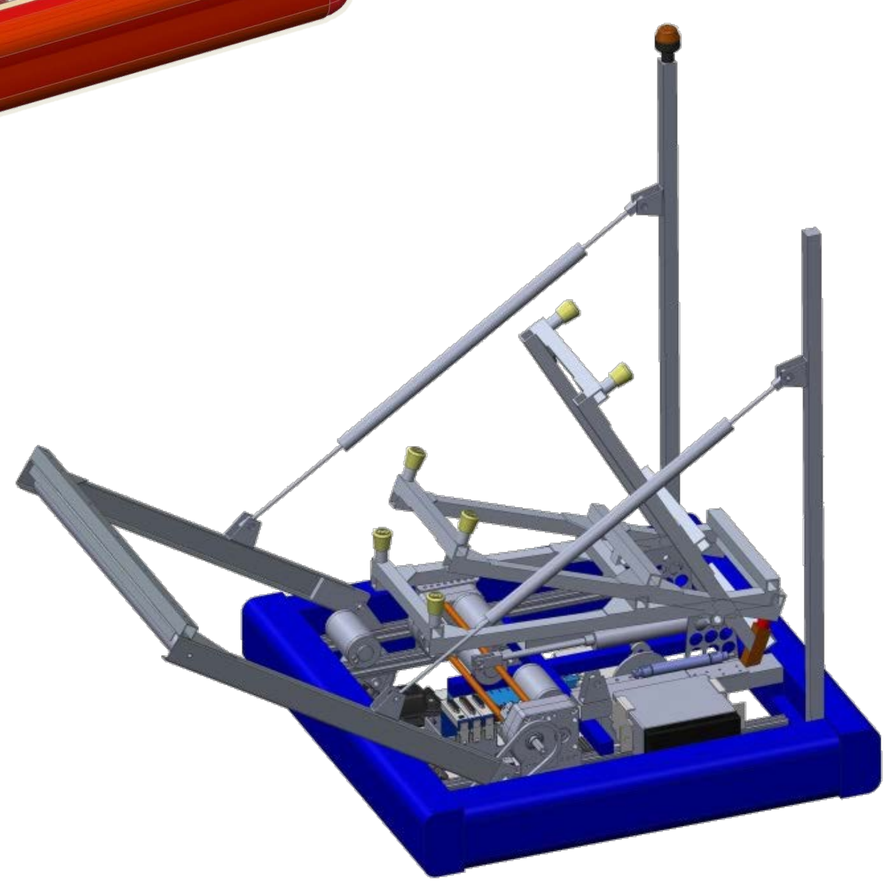

PTC® Creo®

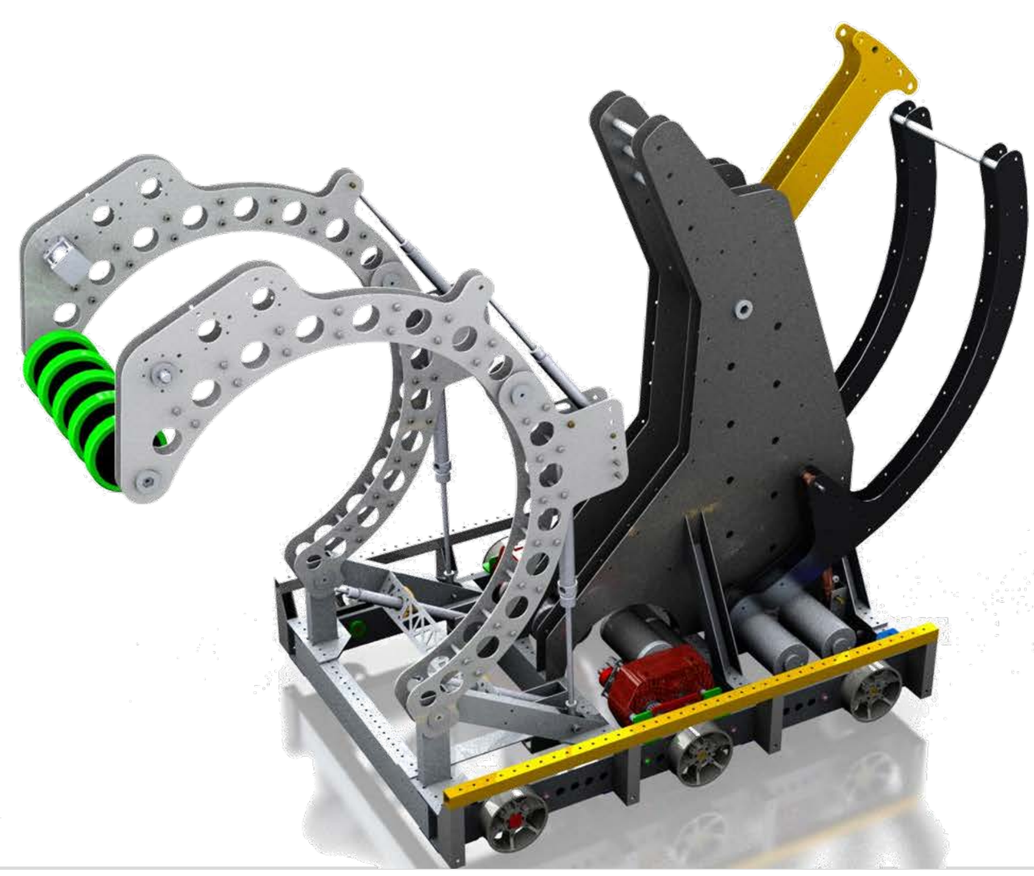

Emerging Engineers

Capturing Creativity

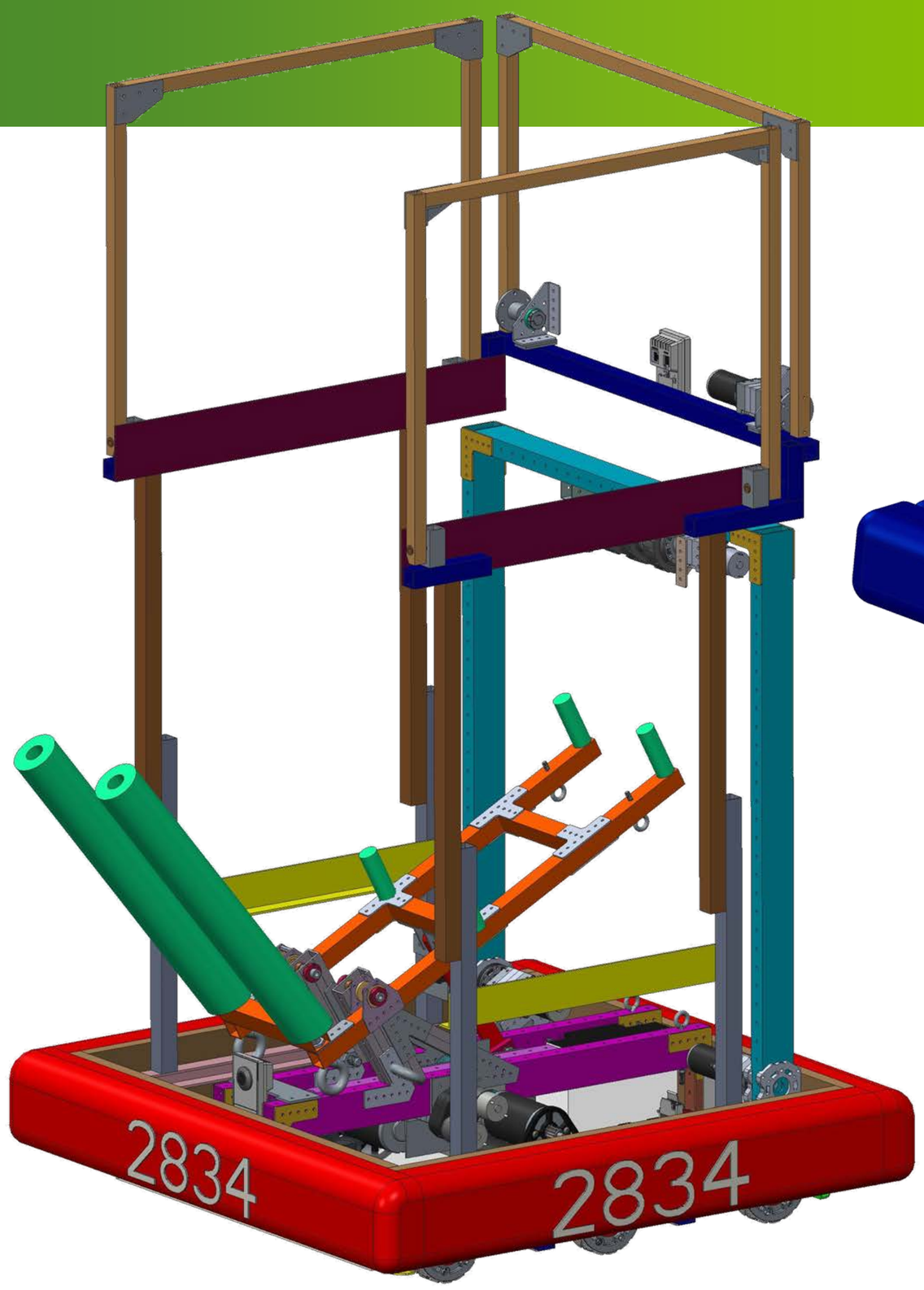

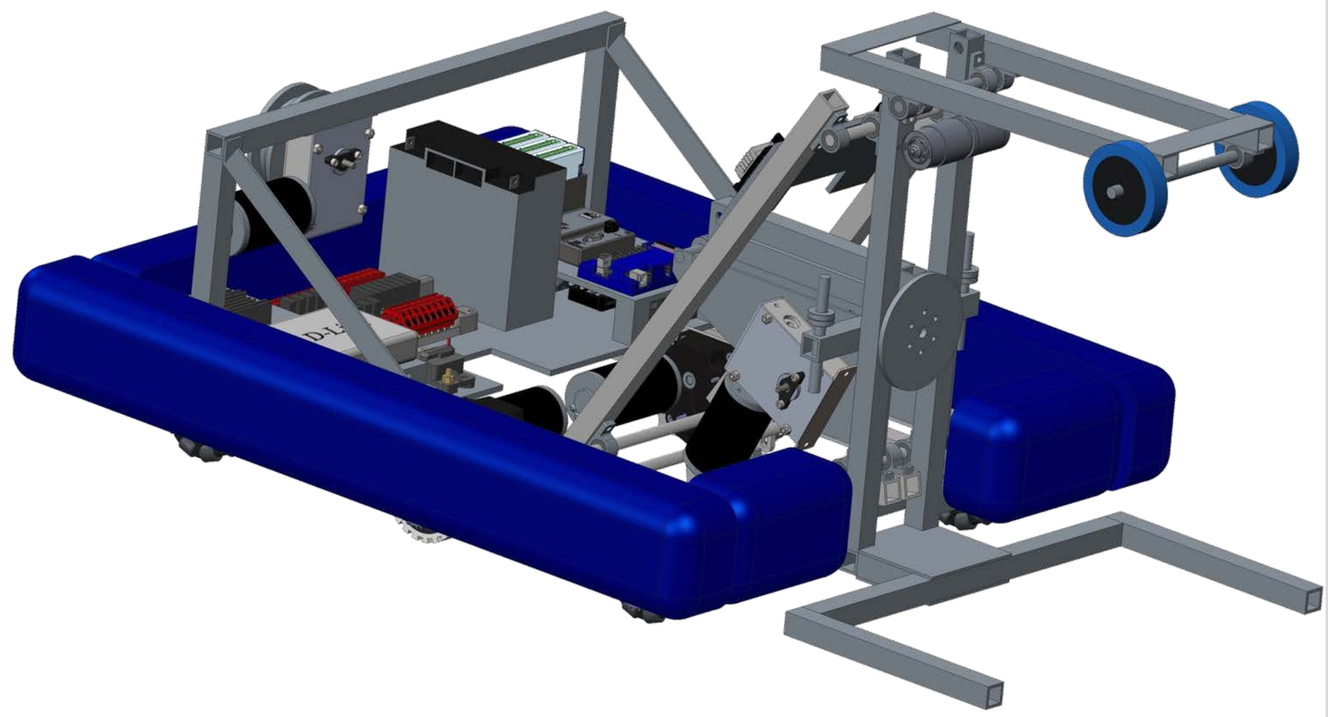

PTC® Mathcad®

FRC®
FIRST® Robotics Competition

Robotic Rhythm

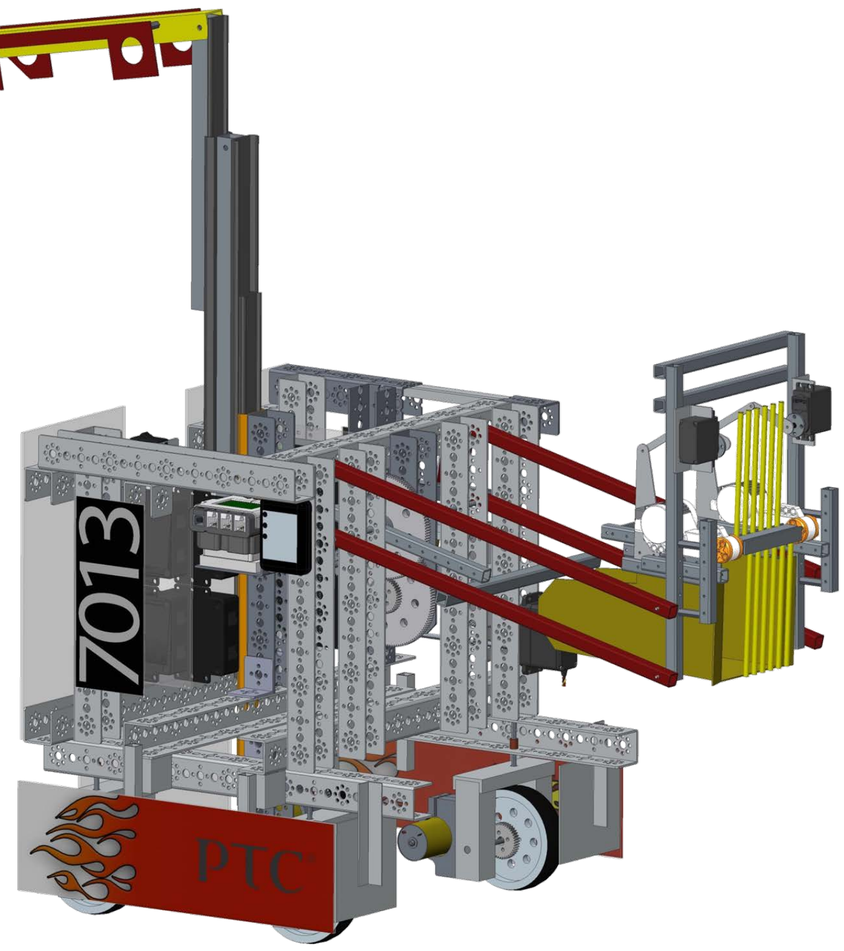

PTC® Creo®

FTC®
FIRST® Tech Challenge

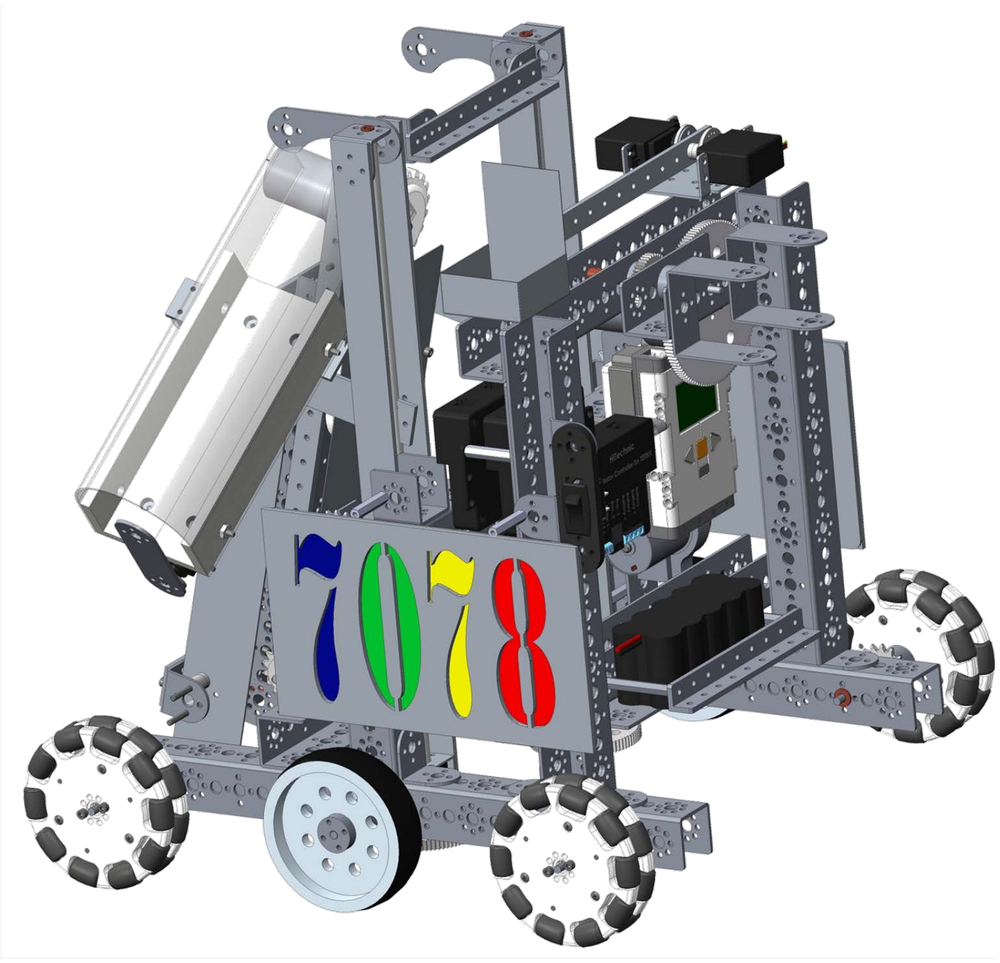

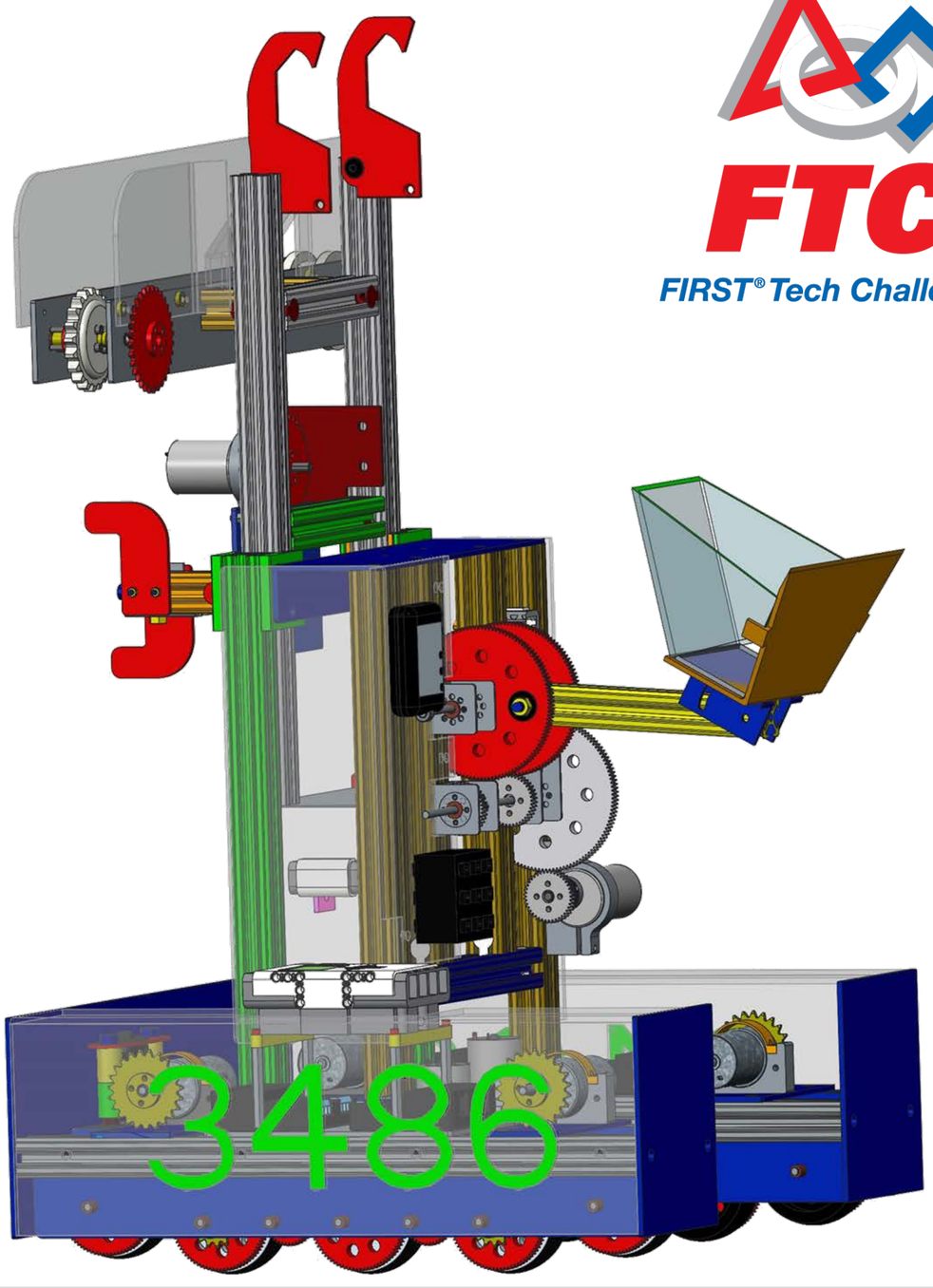

Student Scientists

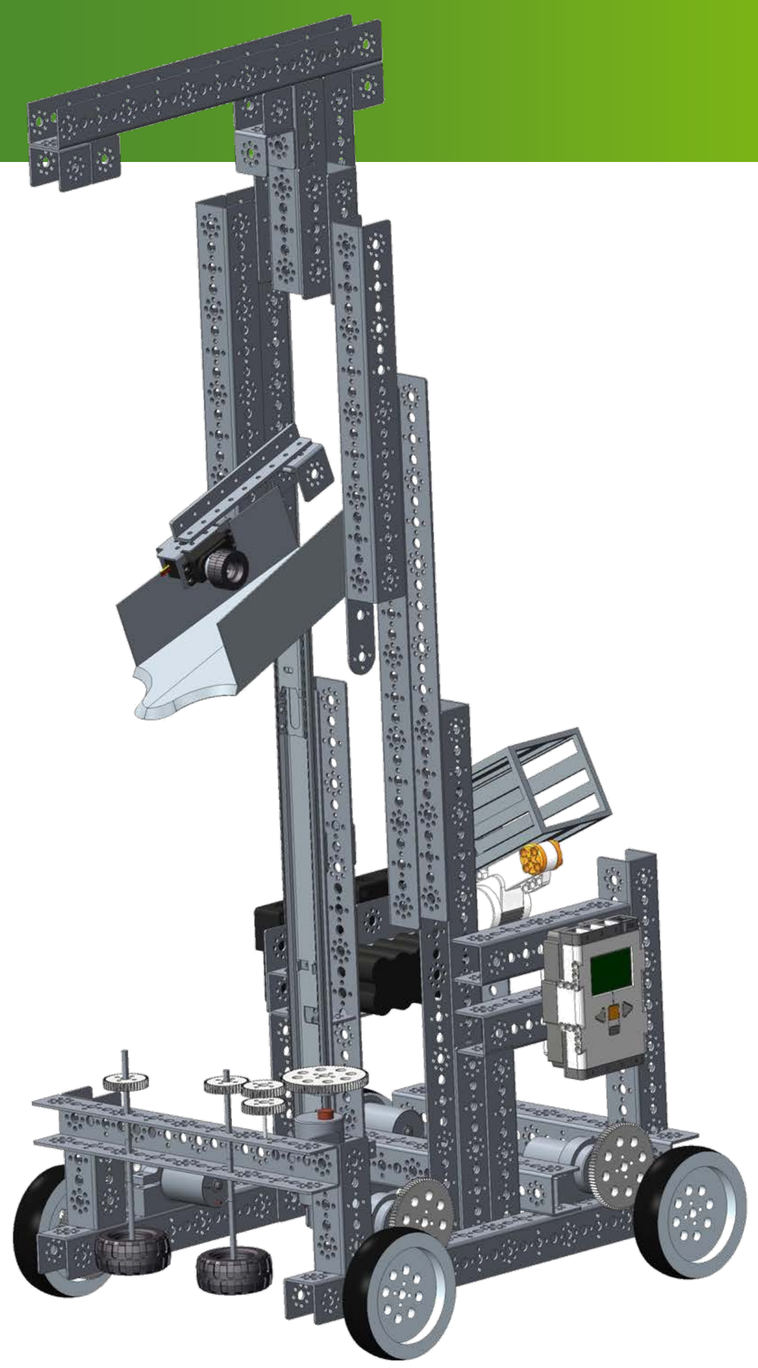

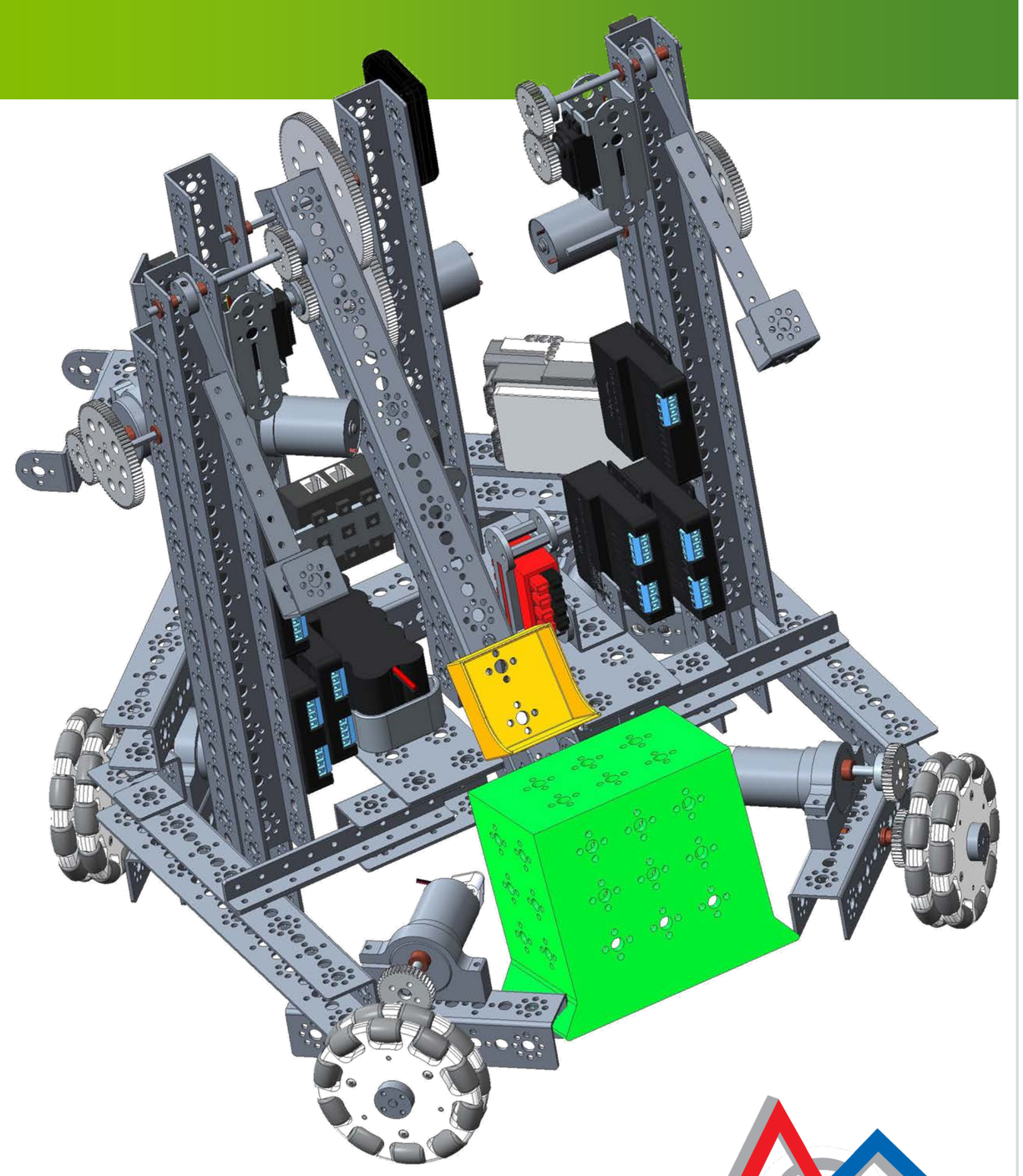

PTC® Creo® View™

FTC®
FIRST® Tech Challenge

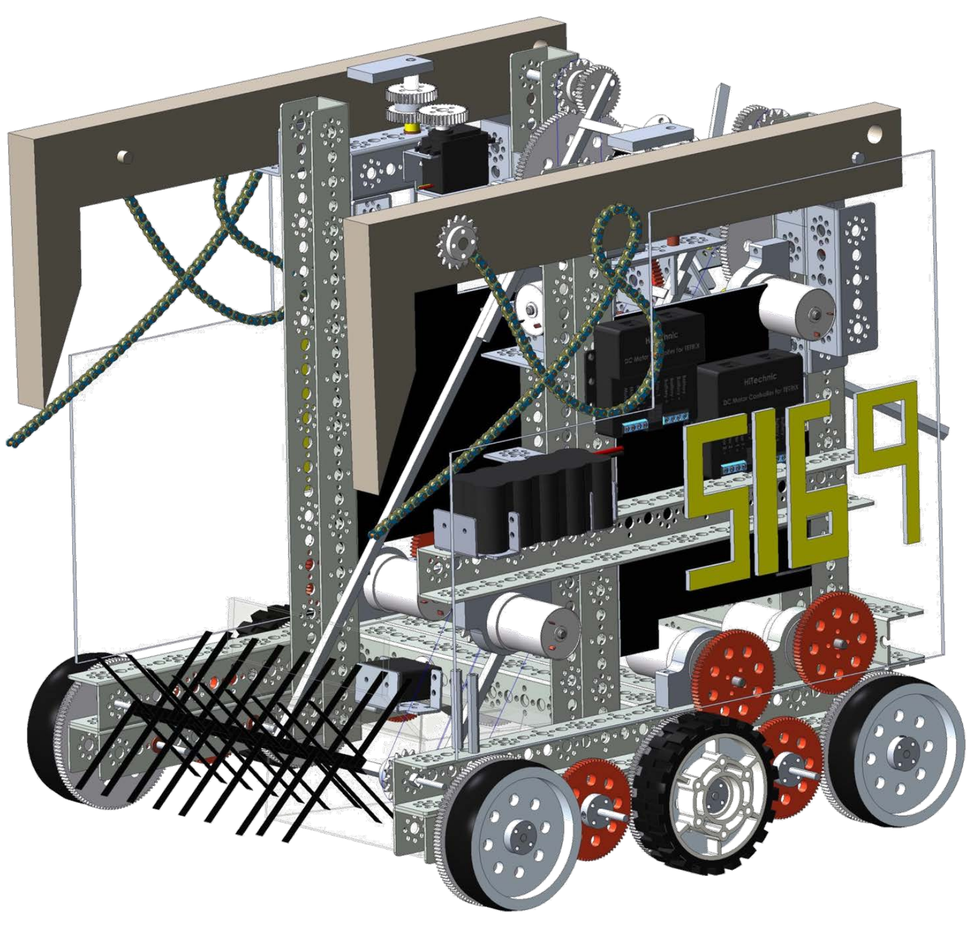

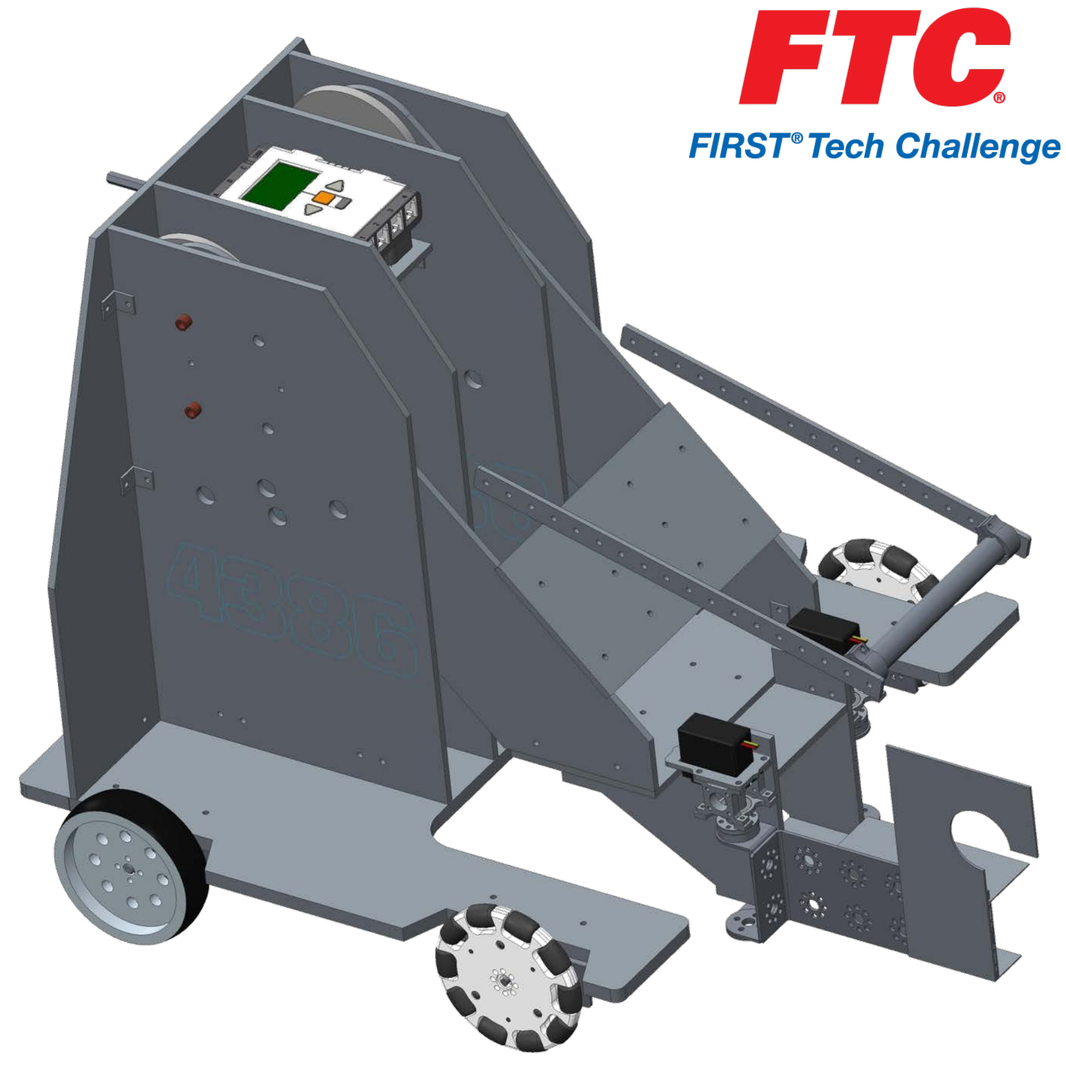

Terrific Technology

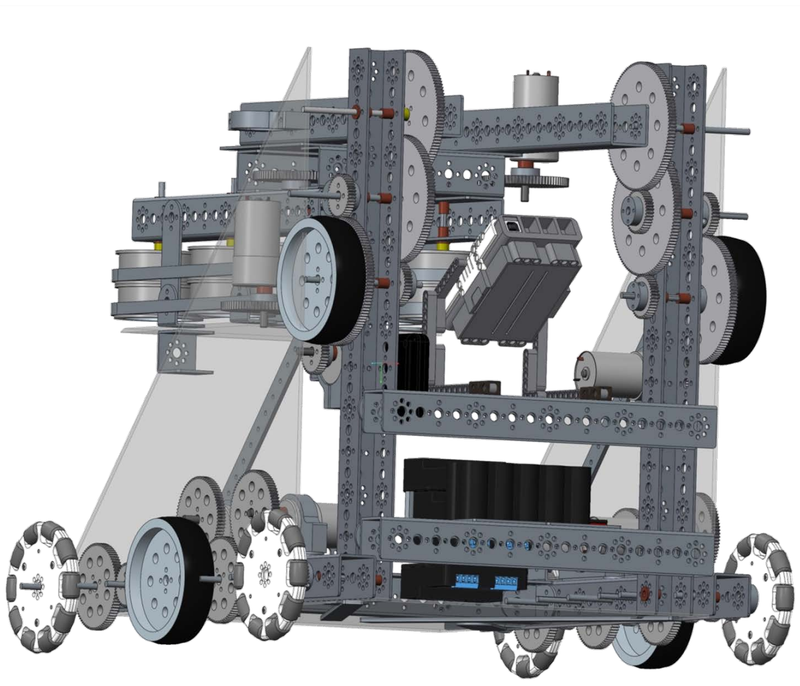

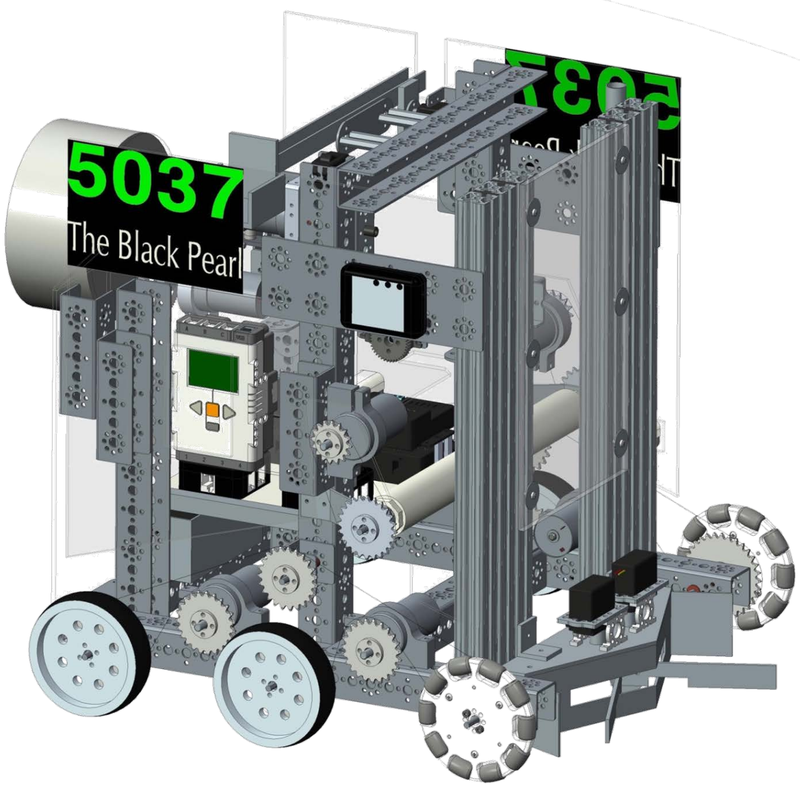

FTC
FIRST® Tech Challenge

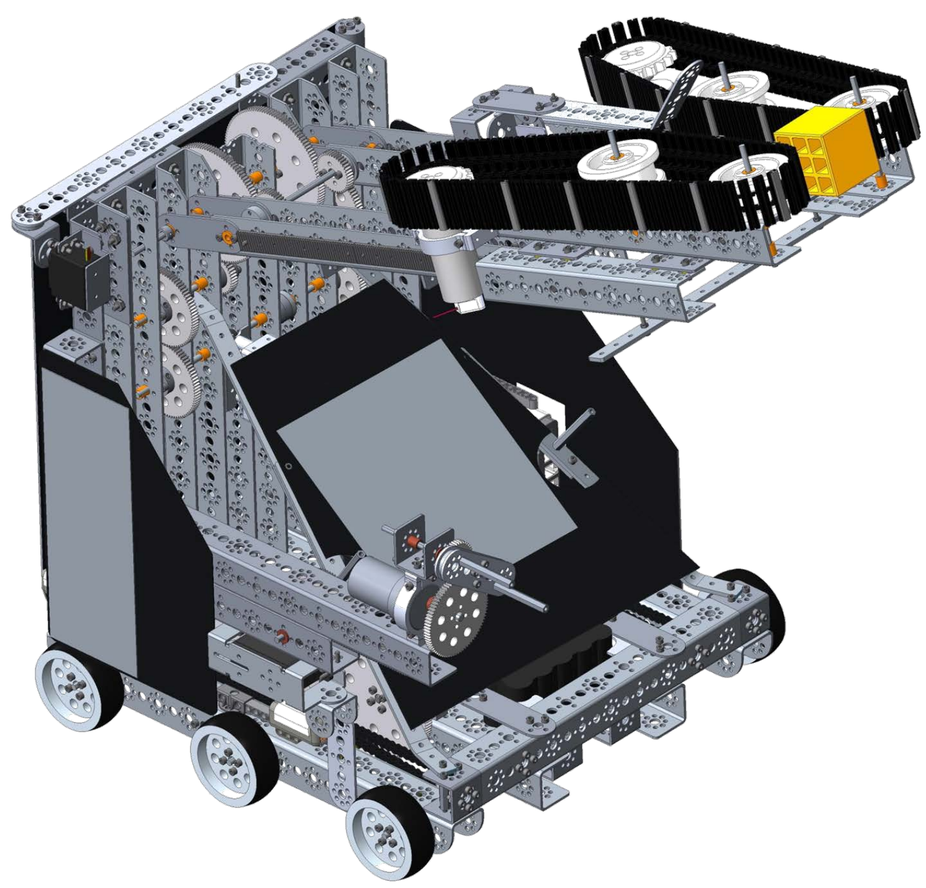

PTC® Creo®

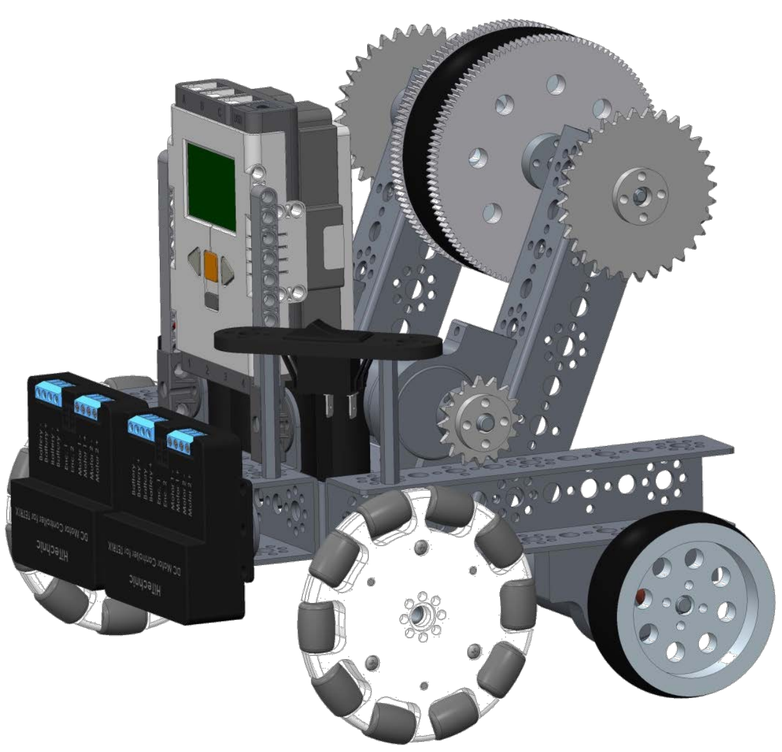

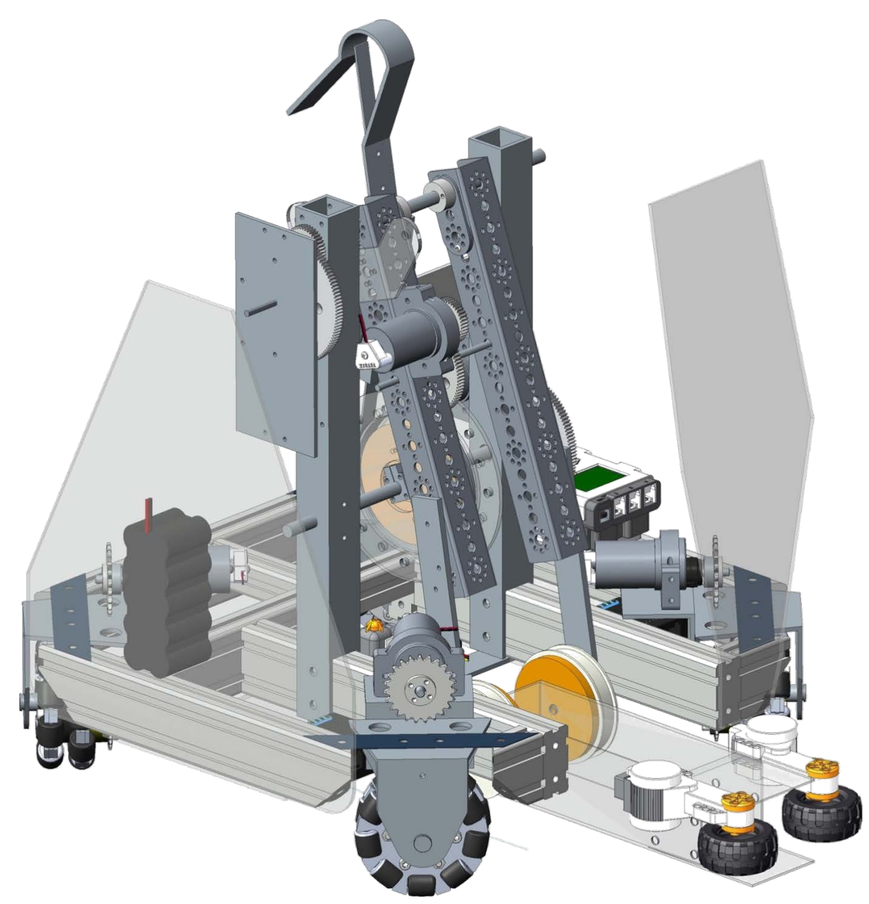

Getting Started

with PTC® Creo®

1.0 Navigating solid models

2.0 What are features?

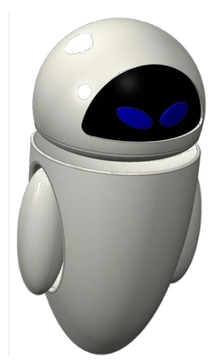

3.0 Analysis & testing

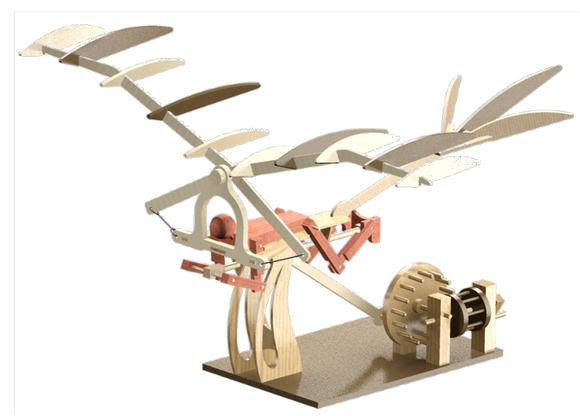

4.0 Assembly constraints

5.0 Kinematics & gear pairs

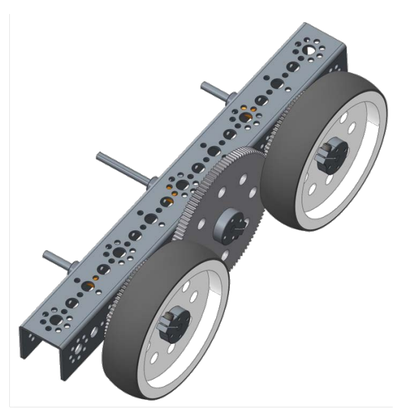

6.0 Building with kits of parts

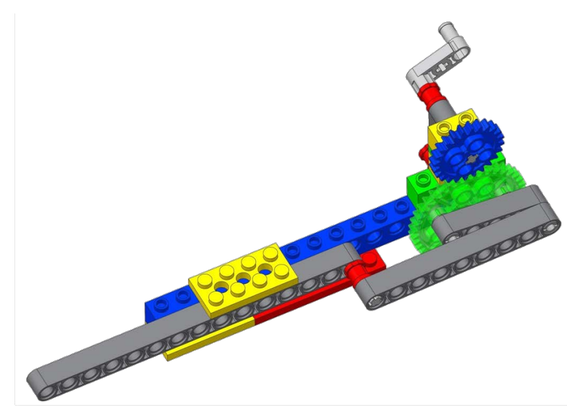

7.0 Model planning

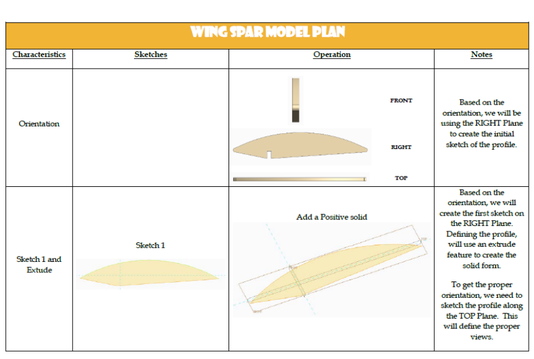

WING SPAR MODEL PLAN

Characteristics	Sketches	Operation	Notes
Orientation		FRONT RIGHT TOP	Based on the orientation, we will be using the RIGHT Plane to create the initial sketch of the profile.
Sketch 1 and Extrude	Sketch 1	Add a Positive solid	Based on the orientation, we will create the first sketch on the RIGHT Plane. Defining the profile, will use an extrude feature to create the solid form. To get the proper orientation, we need to sketch the profile along the TOP Plane. This will define the proper views.

8.0 Sketching

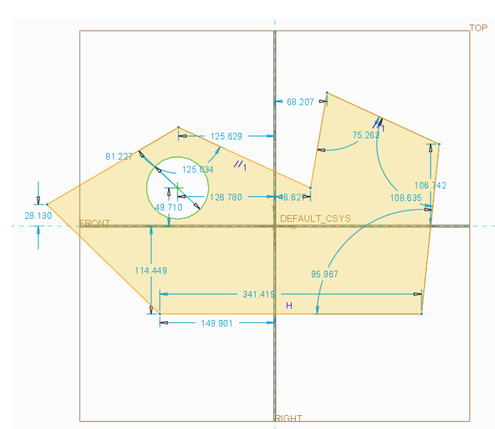

9.0 Creating custom part models

10.0 Simulation

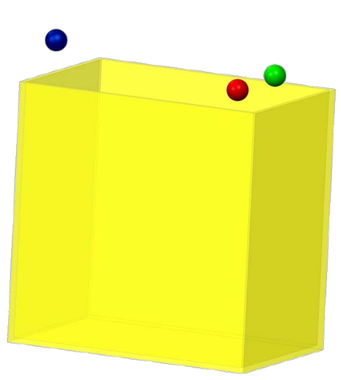

11.0 Data collection

12.0 Integrating Mathcad

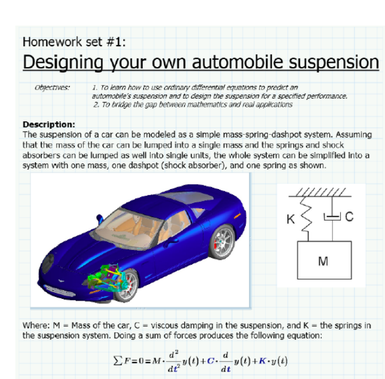

Designing a Robot

Using Real World Product Development Techniques

1.0 The product development process

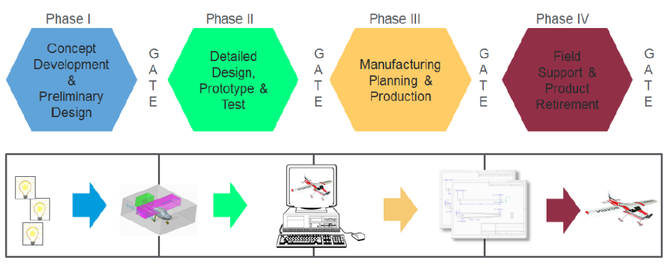

2.0 Project planning

Phase I: Concept Development and Preliminary Design	Week 1	Week 2	Week 3	Week 4	Week 5	Week 6
Creating the project plan	Keri					
Defining system requirements	Jeff					
Modeling the system envelope	Jeff					
Modeling the subsystem envelopes		John, Sandy, Aaron, Dale				
Selecting technologies		John, Sandy, Aaron, Dale				
Documentation		Ralph				
Gate Check: design review		Larry & David				

3.0 System requirements

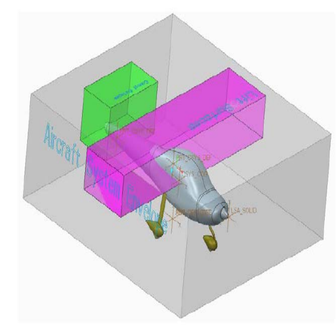

4.0 System envelope

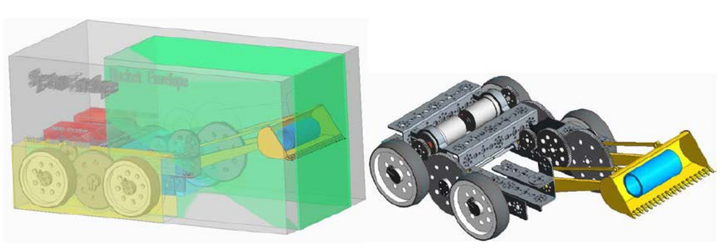

5.0 Subsystem envelopes

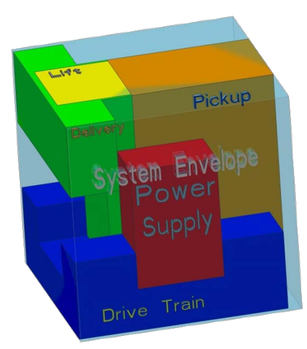

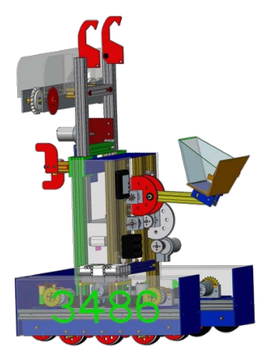

6.0 Proof of concept models

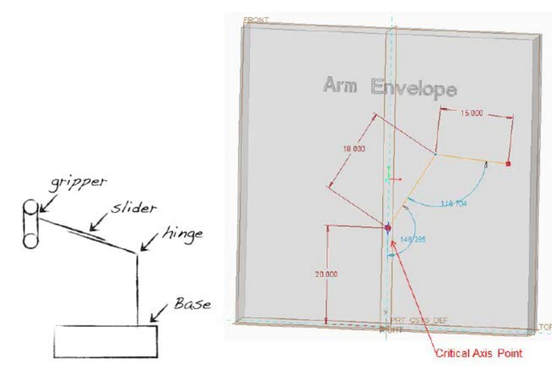

7.0 Detailed design & associativity

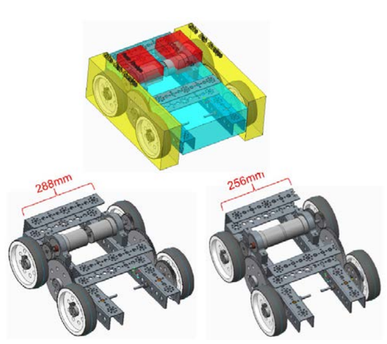

8.0 Simulation and model validation

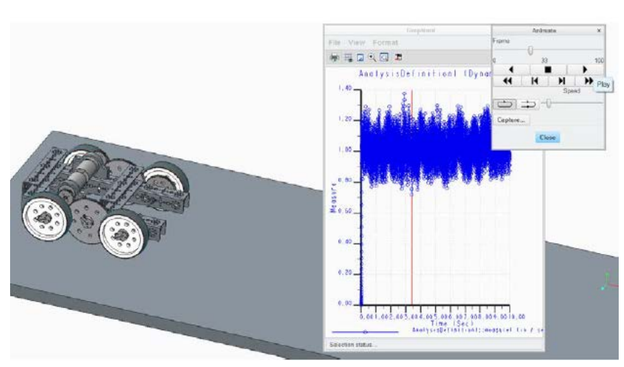

9.0 Exploded drawings & assembly plans

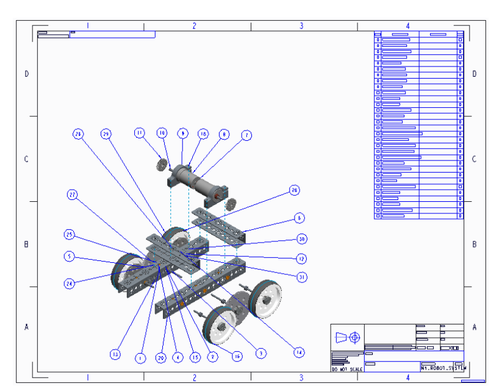

10.0 Failure modes and effects analysis

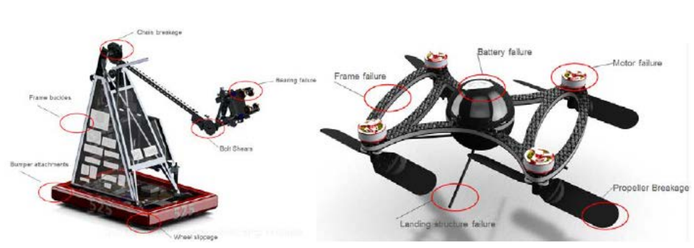

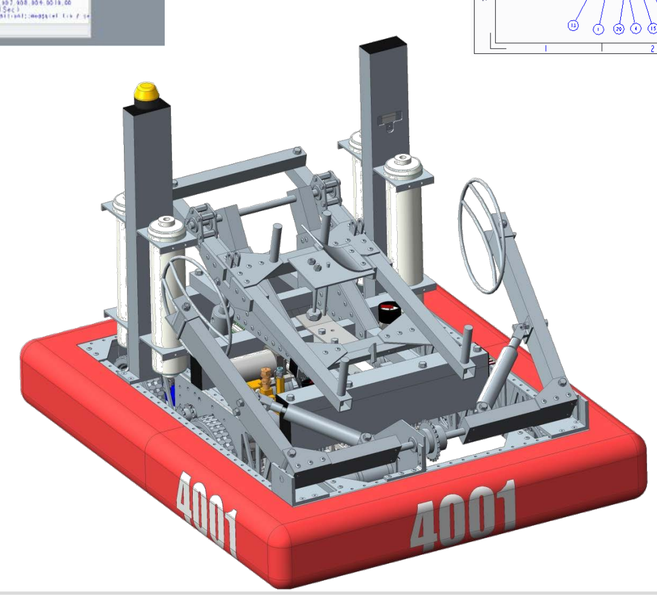

Creating Engineers

Software Grants

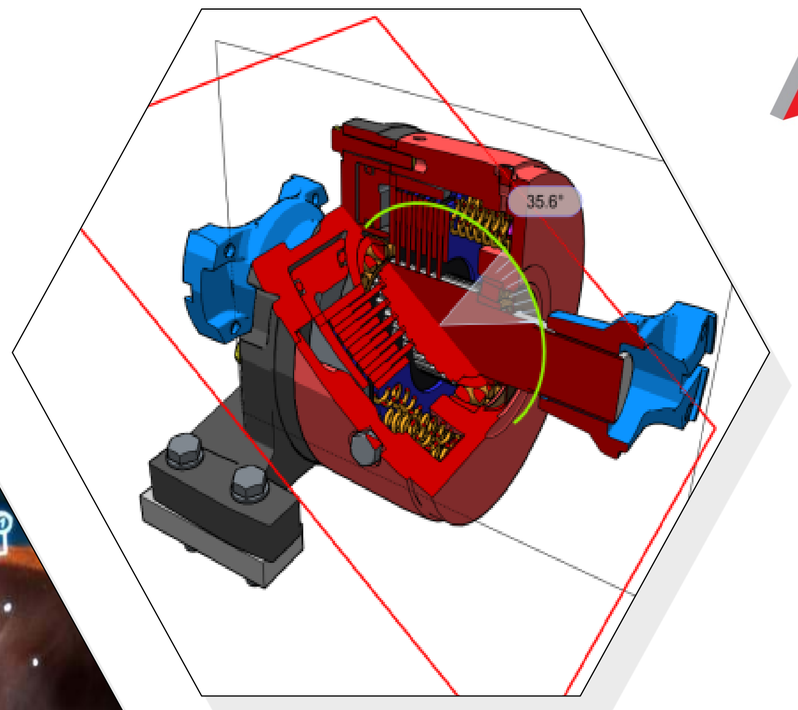

FIRST

Online Training

www.ptc.com/go/first

Team Grants

PTC®

Mechatronic Marvels

Passion & Power

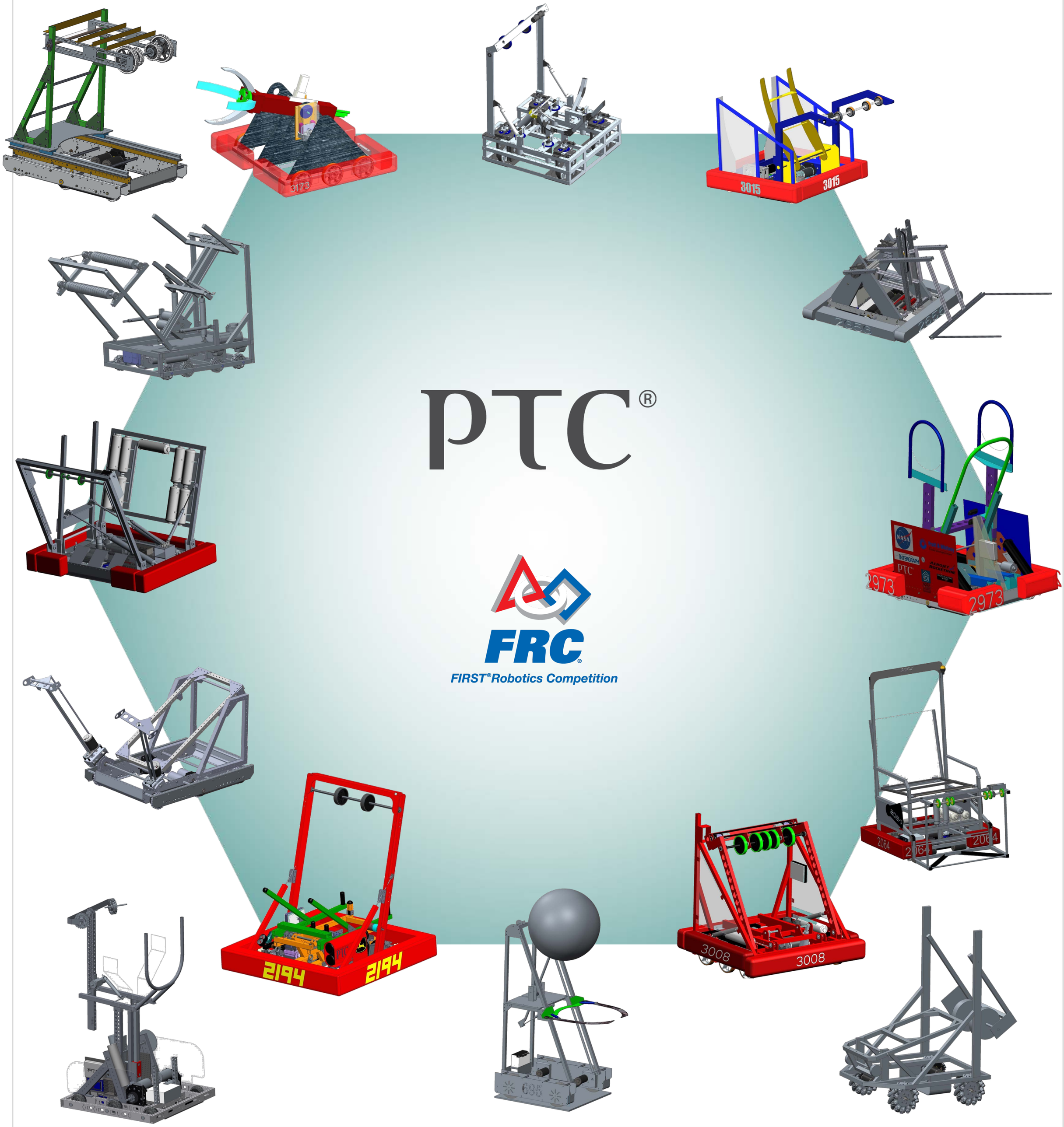

Mechanical Motion